BOSCHE

Volume measuring system

zippcube®

Operating manual

- Translation of the original -

(keep for future use)

Version - Version -

Last revised: 2023-11-20

Bosche GmbH & Co. KG

Reselager Rieden 3
D-49401 Damme

Phone +49 5491 999 689 0
Fax +49 5491 999 689 9
Email info@bosche.eu
Web www.bosche.eu

This manual has been created on: 2023-11-20

Type plate example zippcube M

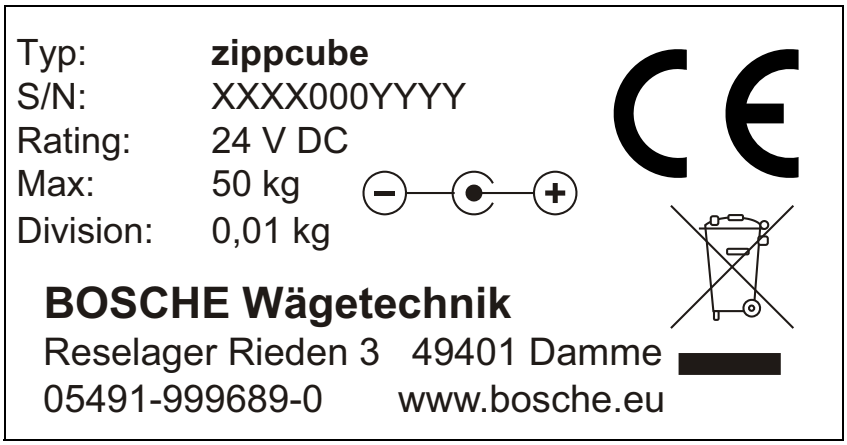

xxx = Year
yyy = Serial number

Foreword

These operating instructions provide you with detailed information about the Volume measuring system zippcube.

These instructions contain safety instructions to guarantee safe use of the volume and weight measurement system.

The manufacturer strives to improve their products on an ongoing basis. They reserve the right to carry out any and all modifications and improvements that they consider to be necessary. However, this means that there is no obligation to carry out retrospective modifications in this connection.

Danger
Before using the EWI / MWI, you must have read and understood the operating instructions and the safety regulations that they contain.

Note
Errors and omissions in the documentation reserved. If necessary, please inform the Bosche GmbH & Co. KG of any errors in the documentation. We would also be grateful for any suggestions for improvements that you may have.

The manufacturer's contact data is listed on the reverse of the title page. If you have any queries or problems, please contact the manufacturer without delay.

Note
If you have any questions for Bosche GmbH & Co. KG, please have the serial number to hand.

Table of contents

1 Safety

This chapter warns against possible risks when handling the device. The information for detection of risks contained in this chapter is intended to allow the save and correct operation.

It is important to read and adhere to this operating manual and particularly this chapter prior to operating this device.

1.1 For your Safety

1.1.1 General

In addition to safety information, the operating manual includes:

- A general product description
- Information about installation and connection of the device
- Instructions to operate the device
- Maintenance and care instructions
- Troubleshooting and remedy instructions
- Technical data

Always keep this operating manual and additional documents for your personnel at hand in the direct vicinity of the device.

Always adhere to all information, notes, instructions and explanations contained in this manual! Avoid accidents caused by incorrect operations! Also adhere strictly to the valid legal regulations in addition to the safety instructions specified in this manual.

Prior to commissioning/start-up read the safety information/instructions and familiarise yourself with dangerous areas.

The device is constructed according to the current state of art and the valid safety regulations. However, there are risks in the event of incorrect operation or non-observance of the safety regulations:

- Danger to limb and life of operators, third persons and animals staying in the vicinity of the device.
- Danger to the device and other assets of the owner/user
- Danger to the efficient operation of the device.

1.1.2 Safety Symbols in this Manual

The following symbols are used on all important positions in this manual. Particularly observe these notes and treat very careful.

Danger
This note indicates danger of injuries and/or danger to life, if specific behaviour rules are not observed.
When this symbol appears in the operating manual, please take all required safety measures.

Attention
This note warns against damage to assets as well as financial disadvantages and responsibility under criminal law (e.g. loss of the warranty, cases of third party risks, etc.).

Note
Important notes and information about an efficient, economic and environmental friendly handling are specified here.

1.2 Intended Use

The Volume measuring system exclusively serves to display the weight in combination with suitable load cells.

The load cells are intended for use as "non-automatic weighing instruments".

Any further use is considered as not in accordance with the intended use. The manufacturer does not assume any liability for resulting damage.

The intended use also includes:

- Observance of all notes, information, instructions contained in the documentation as well as in all supplied manuals issued by the manufacturer.
- Adherence of the maintenance and service conditions and intervals prescribed by the manufacturer and
- Observance of the technical data.

Adhere to the attendant accident prevention regulations as well as other generally approved technical safety rules.

Note
Always specify the serial number of your display for all questions, orders or jobs. This will facilitate the communication with the manufacturer and prevents error during editing your request.

1.3 Inappropriate Use

- Use in explosive environments (ATEX zones).
- Modification or opening of the device.

1.4 Obligations of the Owner/User

The owner/user obligates himself to only instruct persons to work on the device, who:

- Are familiar with the basic rules concerning safety and accident prevention and are trained in the operation of this device and
- have read and understood the operating manual, the safety chapter as well as the warning notes.

1.5 Obligations of the Operator

All persons instructed to operate the device obligate themselves:

- to always ensure the safety of other persons,
- to read the operating manual, the safety chapter and the warning notes and
- to only operate the device when they are familiarised with its functions.

1.6 Description of the Dangers

1.6.1 Danger of Injury

- Always switch off the device for care and maintenance work.
- Never insert any pointed objects into the electric contacts.
- Do not change the contacts.
- Stop device operation, if the device or the connection line is damaged of have a malfunction.

1.6.2 Danger of Damages

- Only connect the device to suitable load cells (see chapter 3.6 “Interface”).
- Never use pointed objects to actuate the device keys.

1.7 Liability and Warranty

The BOSCHE company offers a restricted warranty for components, which became faulty due to strain or material faults. The warranty starts with the date of delivery. The BOSCHE company retains the right to repair or replace components. Repair work executed during the warranty period will not extend the period of warranty. The warranty becomes null and void:

- In the event of incorrect use / use other then the intended use or incorrect installation
- Incorrect electric connection
- Use of an incorrect or non-licensed analogue / digital converter
- Non-observance of the specifications in the operating manual
- Conversion, modification or opening of the device
- Unintentional or mechanical damage and damage caused by media, liquids, natural wear.

2 Description

2.1 General

The Volume measuring system zippcube is use

- to measure the length, width and height of an object.
- to calculate the volume of the bounding box (determining the smallest possible packaging).
- to determine the object weight and the volume weight.

The data that is determined can be used to improve the use of space (storage or transportation location). At the same time, the system optimizes packaging, storage and despatch. The data that is collected can be transferred to a computer system.

2.2 Set-up

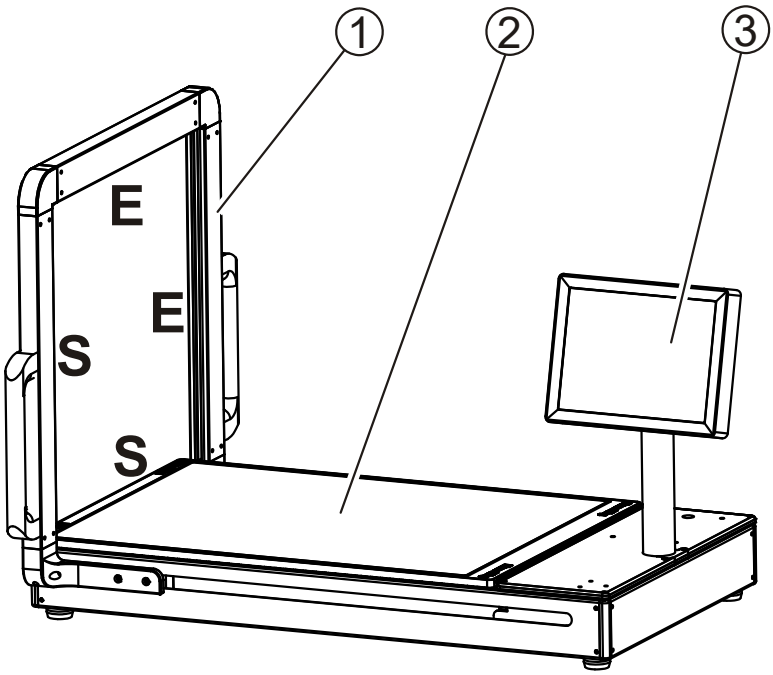

Item	Bezeichnung
1	Measurement port with light grid (T = transmitter, R = receiver)
2	Measurement plate - consisting of 8 mm toughened safety glass with a 2 mm scratch-resistant plexiglass guard.
3	Industrial PC with display

2.3 Measuring principle

Under the glass plate, four load cells are installed in the corners. The load cells record the load on the glass plate and transfer it to the industrial PC. The system shows the object weight and the volume weight on the display of the industrial PC.

During the movement of the measurement port, a light grid system scans the package and, while doing this, determines the associated volume and the resulting volume weight.

In the measurement port, there is one light-emitting bar on the left-hand side of the glass plate and at the bottom below it. On the right-hand side and at the top, there is the receiver bar opposite the transmitter.

An object that is placed on the glass plate interrupts the light beam and the opposite receiver area does not receive a light signal. The object edge is the transition from the end of light entrance to the start of the dark area.

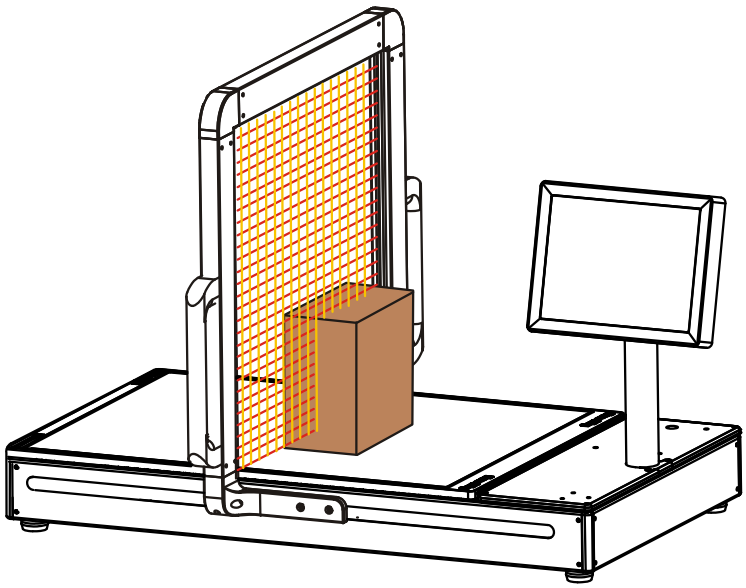

Notes

- It is not possible to measure transparent objects.
- Avoid direct light irradiation (in particular in the receiver area).
- The glass plate must be clean and undamaged.
- Always use Perspex screen to avoid scratches on the glass plate
- Place the measurement objects on carefully.
- Nothing must interrupt the light beams except for the measurement object.

2.4 Industrial PC

The Bosche 15-inch industrial PC is used as the display unit. You operate the industrial PC using a touchscreen.

The industrial PC has the following interfaces:

- two USB 2.0 ports
- one Ethernet LAN port
- two wifi antennas

A windows operating system is installed to operate the volume measuring system. A weighing software is required.

Note
The weighing software used is described in a separate operating manual.

2.5 Measurement value output

The main page of the optional VolumeScannerProfessional software displaysall the relevant measured values of the measurement object (the weight, thevolume weight, the length, width, height and volume). In addition, the system saves this data.

The VolumeScannerProfessional software either outputs the saved data as a. CSV file or transfers it directly to a database.

Note
If you use different weighing software, output of measured values is described in its manual.

2.6 Optional equipment

Note
All the equipment and enhancements that are available as options are described in Chapter 5, “Optional Equipment”.

3 Transport, installation, connection

3.1 Control

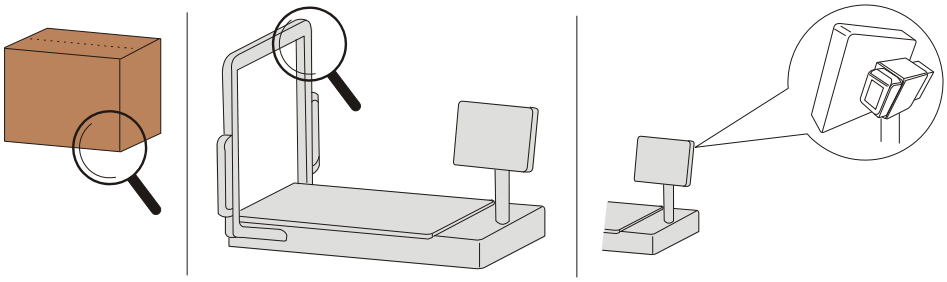

When the device is delivered, check the packaging, the device and possible accessories for visible damages.

3.2 Packaging and disposal

Keep all parts of the original packaging for a possible return.

Note
Only use the original packaging, if the display is returned.
Prior to the transport, disconnect/fasten all loose/moving parts of the device.
Secure the parts against slipping/damage.

Dispose of the packaging and the display according to the national and/or local regulations by law valid on the installation site. Separately dispose of a defective battery according to the national and local regulations on environmental protection and recycling.

Do not treat a battery as standard waste. Please dispose of via a waste management company.

3.3 Installation and connection

Keep the device clean and do not expose to an environment influencing the display accuracy.

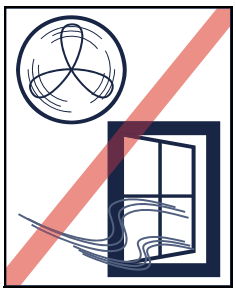

Protect against draught!

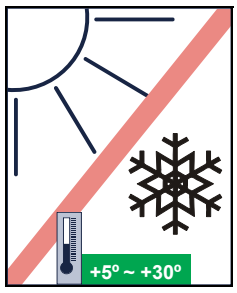

Protect against heat, sun and frost!

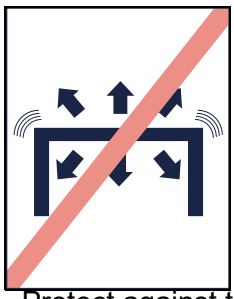

Protect against tilting a and vibration!

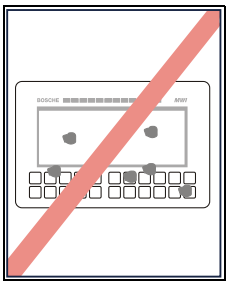

Keep the unit clean

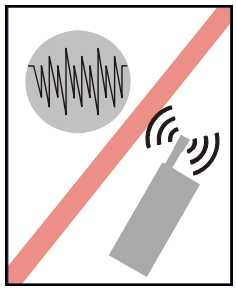

Avoid astable voltage sources!

Avoid humidity!

3.3.1 Set-up work

Danger
The volume measuring system weighs approximately 110 kg. Several people are needed to transport it. If you want to lift and transport the volume measuring system using lifting equipment, you can put carrying loops under the system, these must not slip off.
Pay attention to the centre of gravity.

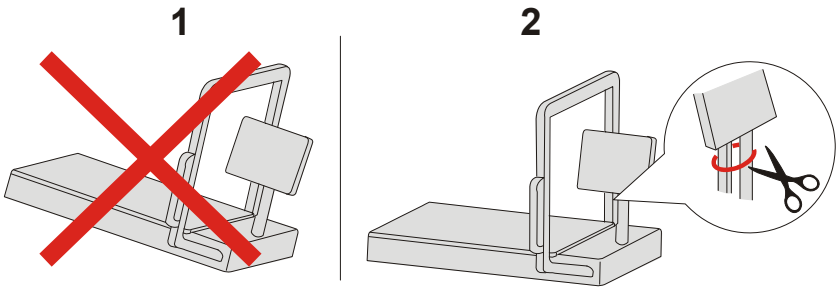

Step 1 Put the volume and weight measurement system tilt-free on an even, level surface and align it exactly.

Step 2 Release/remove all the transport retainers (e.g. cable ties).

3.4 Connection

Note
Ensure that a 230 V AC voltage supply is available on the installation site (unless operation with rechargeable batteries is intended).

As-standard, the measured data is saved on the industrial PC's hard drive. If you want to use the measured data in a different environment, you need dataconnections to transfer the measured data.

Data connections: Wifi connection (1), network port (2) or a USB port (3).

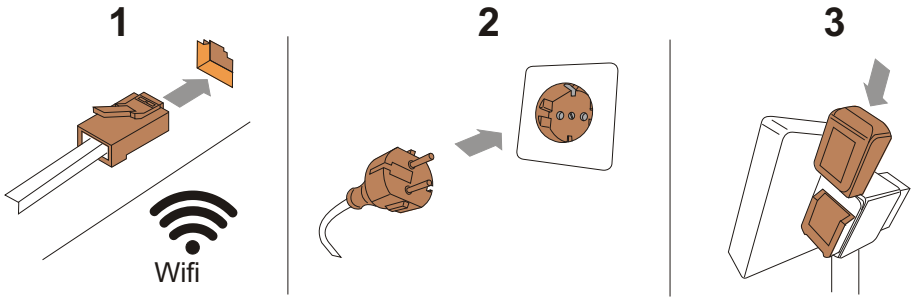

Step 1 If necessary, establish a data transfer connection.
Standalone use = Plug in the LAN plug in the network port or insert the USB plug.
Mobile use = Establish a wifi connection when starting for the first time..

Step 2 Plug in the volume and weight measurement system to the mains (if operating without a rechargeable battery = standalone use).

Step 3 Insert the charged batteries (optional equipment for mobile use, for example).

3.5 Transportation positions

3.5.1 Despatch

If you need to despatch the volume and weight measurement system (e.g. to the manufacturer for repairs), proceed as follows:

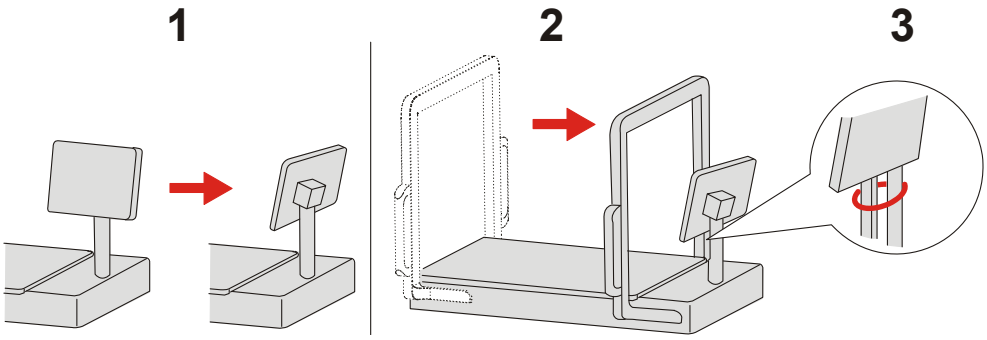

Step 1 Put the display into the transport position (parallel to the measurement port).

Step 2 Push the measurement port to the display.

Step 3 Secure the position of the measurement port (using cable ties, for example).

Step 4 Pack the volume and weight measurement system appropriately and securely to prevent damage in transit.

3.5.2 Transportation using the optional transport trolley

Using the optional trolley, you can use the volume and weight measurement-system on a mobile basis.

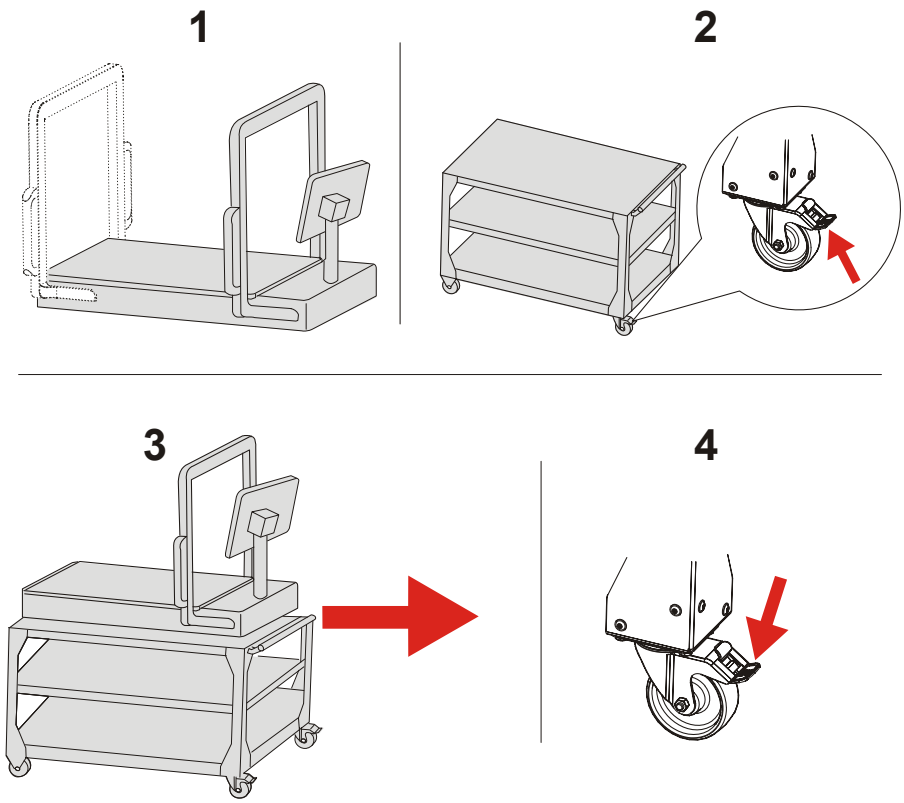

Step 1 Remove any measurement objects that may still be on the device and put the display in the transport position (parallel to the measurement port).

Attention
The display must not protrude beyond the outer edges of the volume and weight measurement system. Danger of damage in transit.

Step 2 Release the two brakes on the casters of the transport trolley.

Step 3 Carefully push the transport trolley to the new measuring location.

Step 4 There, secure the transport trolley by applying the two brakes again.

4 Operation

This scale is used to determine the dimensions and the weight of an object as well as its volume weight..

4.1 Switching on

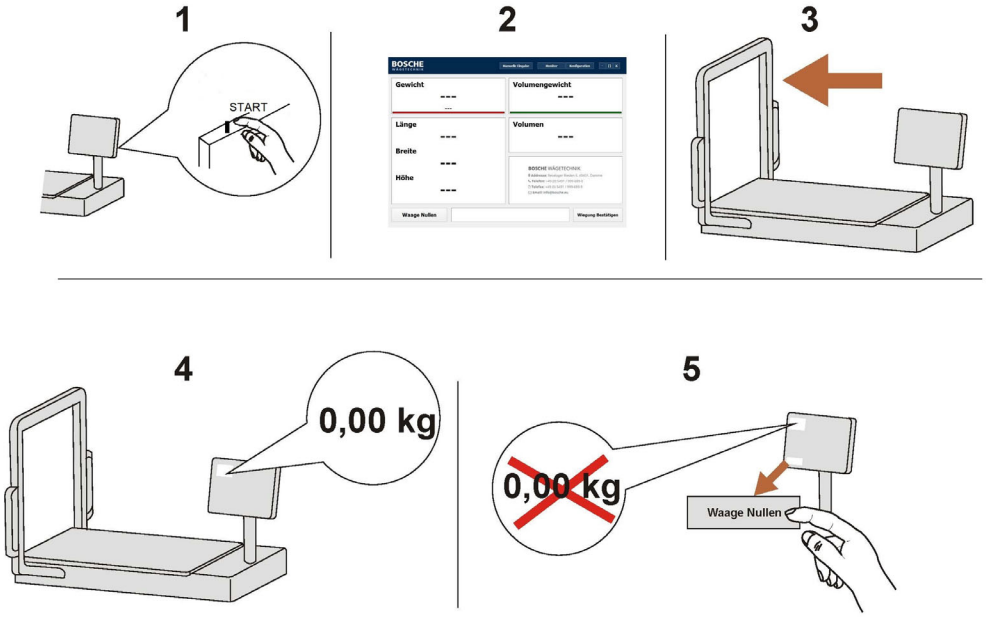

Step 1 <u>With power supply unit:</u>
Press the START button on the back, the PC starts (LED button lights up green, operating LED lights up blue).

<u>Without power supply unit, with batteries:</u>
- Make sure that the battery switch is ready for operation (LED button lights up green).
- Then press the START button on the back of the PC.

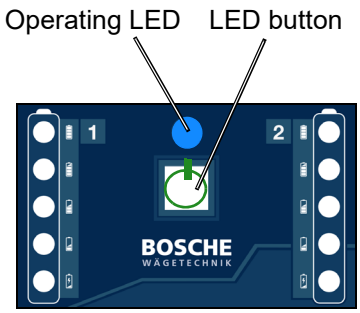

Step 2 Wait until the system has booted and the main screen is displayed.

Step 3 Move the measurement port to the end position.

Step 4 Check that the weight display of the empty scale shows 0.00 kg.

Step 5 „Zero“ the scale, if the weight display of the empty scale does not show 0,00 kg.

4.2 Battery switch (optional)

The Bosche Battery switch enables mobile working with Bosche weighing systems. The weighing system is powered by two batteries, in which first a battery is being discharged. Is this discharged or removed unexpectedly from the device, the battery switch switches to the second battery. When the secondary battery is discharged, the system switches back to the first battery. If both batteries are discharged, the system shuts down controlled.

In addition, the battery switch offers the possibility to be powered by an external power supply. If an AC adapter is connected, the battery switch turnes right around on this and the batteries are not discharged. The current status of the batteries is indicated via an LED status indicator. When switched off, the batteries are separated from the hardware technology system and the batteries are not deep discharged.

4.2.1 Status indicators

- Battery-Switch in the off state.
  - LEDs do not light up.

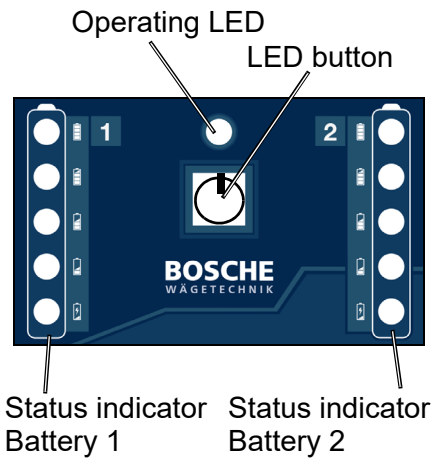

- Battery-Switch started and powered via power supply (without batteries)
  - Operating LED lights up blue.
  - LED button lights up green.
  - The status indicators light up red.

- Battery-Switch started and powered via power supply (with batteries).
  - Operating LED lights up blue.
  - LED button lights up green.
  - The status indicators light up green.

- Battery-Switch started (without power supply unit) with two charged batteries.
  - Operating LED lights up blue.
  - All status indicators light up green.
  - The first battery is discharged, the first status indicator flashes.
  - When the first battery is empty, automatically switches to the second battery.

- Remove battery 1 and recharge using the Makita-charger.
  - Status indicators (battery 1) flash red.
- Insert charged battery.
  - Status indicators light up again green.

- Both batteries are empty..
  - All status indicators flash red.
  - The PC switched off automatically.

4.2.2 Communication protocol

The current battery status can be read via a serial RS232 interface. The baud rate of the serial port is 9600 baud.

Commands:

BAT.POW:100<CR><LF> Status power supply unit from 0 – 100%
BAT.ST1:100<CR><LF> Status battery one from 0 – 100%
BAT.ST2:100<CR><LF> Status battery two from 0 – 100%
BAT.LOW<CR><LF> Both batteries empty. System is switched off.

4.3 Measuring an object

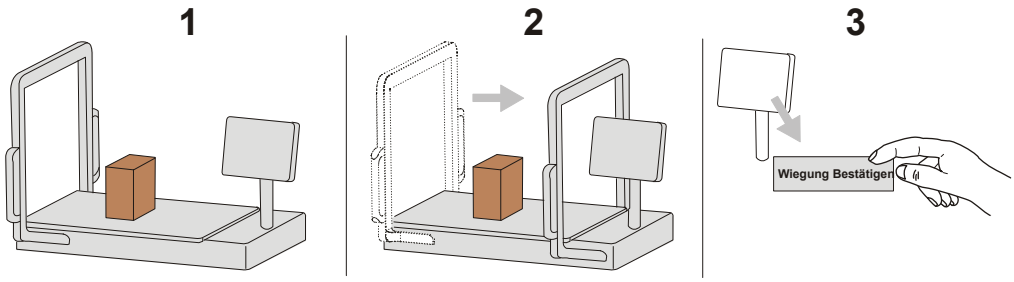

Step 1 Place the object carefully on the perspex screen which is over the glass plate - do not throw or drop it!

Step 2 Pull the measurement port at a maximum of 0.5 m/s in one go completely over the object that you want to measure.

Step 3 Check the data on the screen and confirm the measurements by touching the "Confirm weighing" area.

Note
Only ever place one measurement object on the glass plate. Place the measurement object as close to the middle of the measuring zone as possible.

Note
Avoid changes of direction when measuring. If the measurement port moves too quickly, this will result in a faulty measurement. The system issues an error message.

Note
When measuring, the light grid strips must be free from foreign objects. You must not make any changes to the measuring frame (this could impair measuring precision and functioning).

Note
The weighing software is described in separate operating manual.

4.4 Testing equipment monitoring

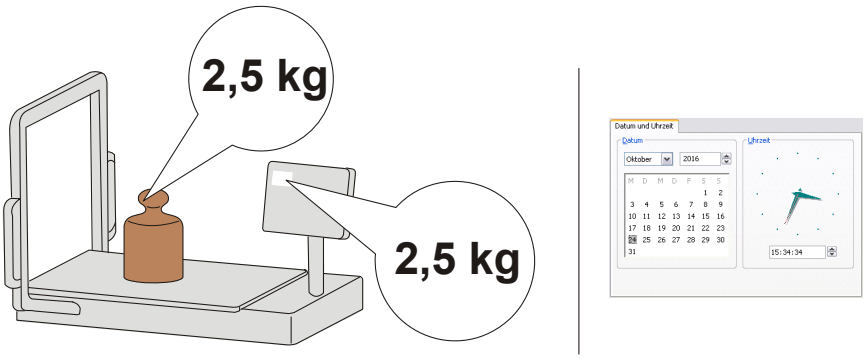

Within the scope of quality assurance, you must inspect the measuring technology properties of the scale in the volume and weight measurement system at regular intervals.

Check the results of the volume and weight measurement system using an object whose weight and dimensions you know for sure. If necessary, use a separate precision scale to determine the weight. If required, use a measuring device for determining lengths to measure the dimensions.

Users must specify a suitable interval for testing as well as its scope. In this connection, you must take into consideration the frequency of use and the sensitivity of the application. In most cases, a two-year test frequency is appropriate.

4.5 Switching off

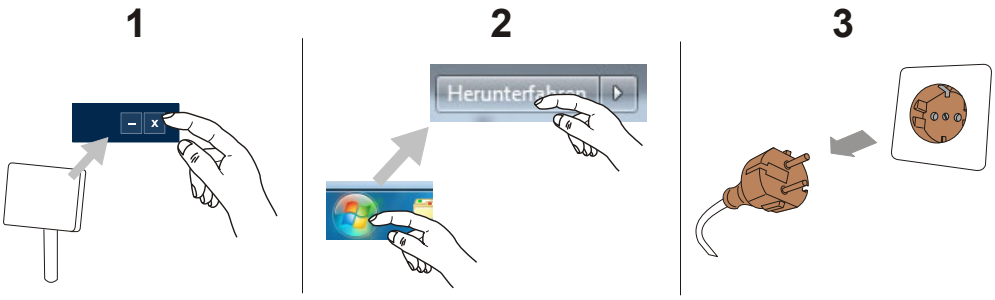

Step 1 Close the weighing software by touching the X. The system closes the software and you can see the Windows desktop.

Step 2 Switch off the industrial PC by shutting down Windows.

Step 3 Pull out the mains plug.

5 Optional Equipment

You can add the optional equipment below to enhance the volume measuring system:

- Precision/reference scale (for precise measurement of relatively small weights)
- Battery switch for supplying off-grid pow
- Transport trolley
- Additional USB ports (for scanner)Camera
- Bluetooth calliper

5.1 Precision scale

An optional precision scale is available for measuring low-weight objects.

To carry out measurement, first run the measurement port over the object as usual. After this, place it on the precision scale for fine adjustment.

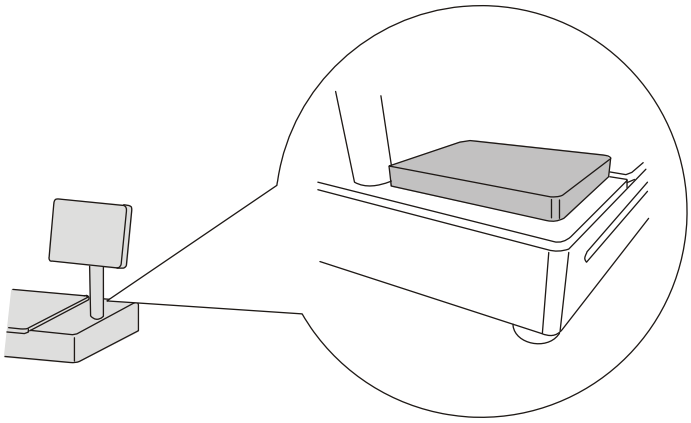

5.2 Additional USB ports

As an option, three additional USB ports are available that are each protected by a screw-on cap.

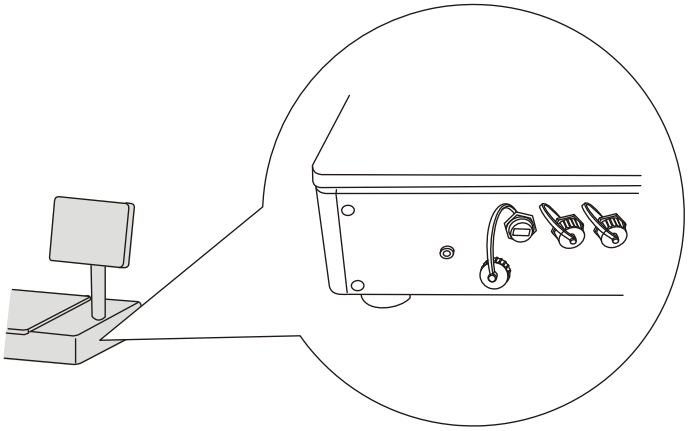

5.3 Battery switch

As an alternative, to supplying power via the normal 230V mains, you can supply the volume and weight measurement system via a rechargeable battery system (a battery switch). The battery switch includes an additional plugconnection for an external power supply.

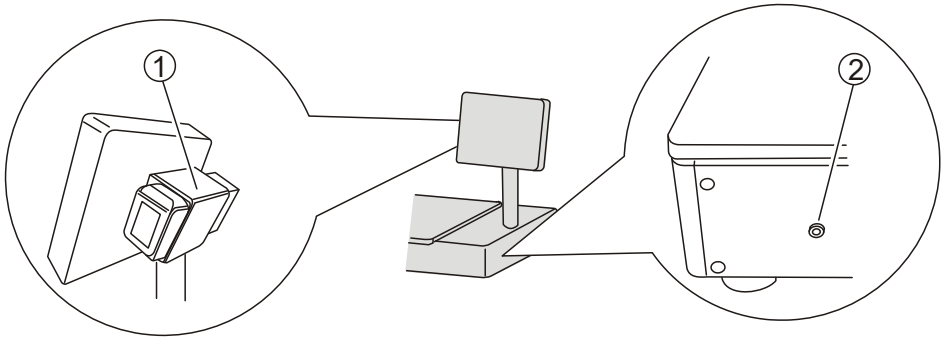

1. Battery switch
2. Connection for external power supply

5.4 Transport trolley

A transport trolley for the zippcube volume and weight measurement system is available as an option.

The volume and weight measurement system is bolted on the transport trolley. The transport trolley has two fixed casters without brakes and two casters with parking brakes.

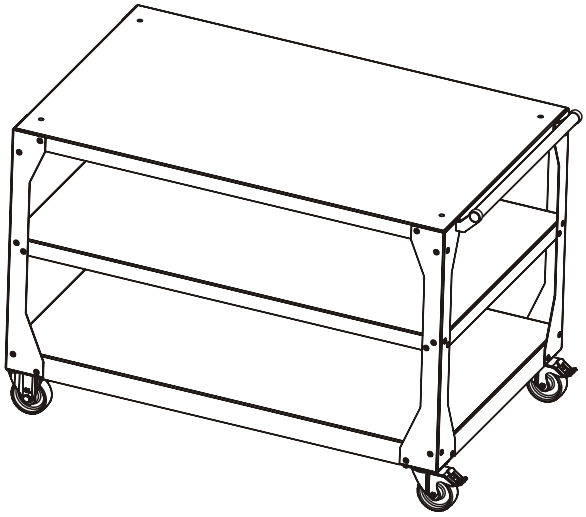

6 Troubleshooting

The symptoms of faults include, for example:

- The system displays obviously erroneous values.
- No data is transferred.
- Despite the measuring surface being empty, the system detects an object/ weight.

If a fault occurs, the remedial measures listed below may be helpful:

- First of all, try restarting the system OR
- Zero the scale (see Chapter 4.1, Step 5) OR
- Clean the scale (see Chapter 7.1) and then check the scale for damage.

If the error keeps occurring, please contact our Customer Service department.

6.1 System restart

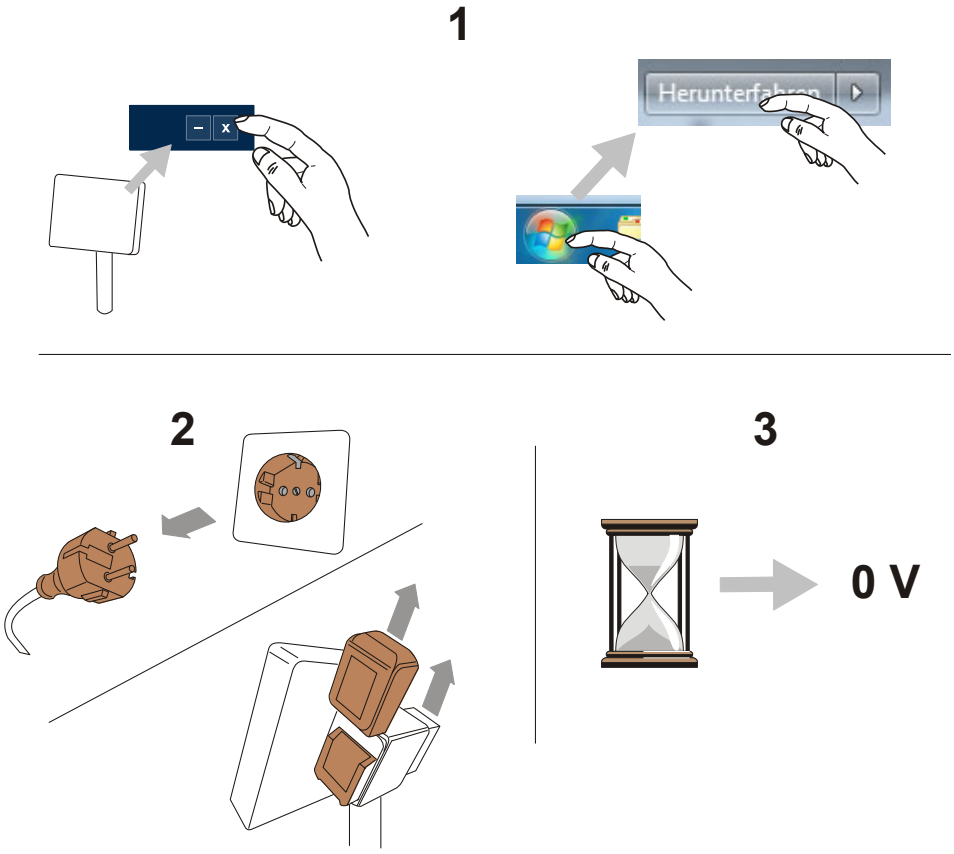

Step 1 Close the weighing software by touching the “X“ area.

Step 2 Pull out the mains plug or remove the batteries.

Step 3 Wait for a few minutes until the system is safely deenergisedt.

Step 4 Restart the system.

6.2 Contacting customer service

Bosche GmbH & Co. KG
Reselager Rieden 3
49401 Damme

Phone +49 (0)5491 9996890
Fax +49 (0)5491 9996899
E-mail info@bosche.eu

6.3 Information needed when contacting customer service

Opersting company	Information
Name of your company	
Name of a contact	
Contactdata Phone Fax E-mail	

Product	Information
Model name	
Serial number	
Software revision number	
Date of purchase	
Name and location of supplier	

Note
Fill in the tables that are shown when you receive the volume measuring system so you can easily refer back to them at any time

Information about the problem:

Examples of necessary information that supports troubleshooting:

- Has the volume measuring system worked since being supplied?
- Has the volume measuring system been in contact with water?
- Has there been fire damage?
- Has there been a thunderstorm before/during the fault?

Note
Please include the entire prior history of the volume measuring system.

7 Maintenance and care

7.1 Cleaning

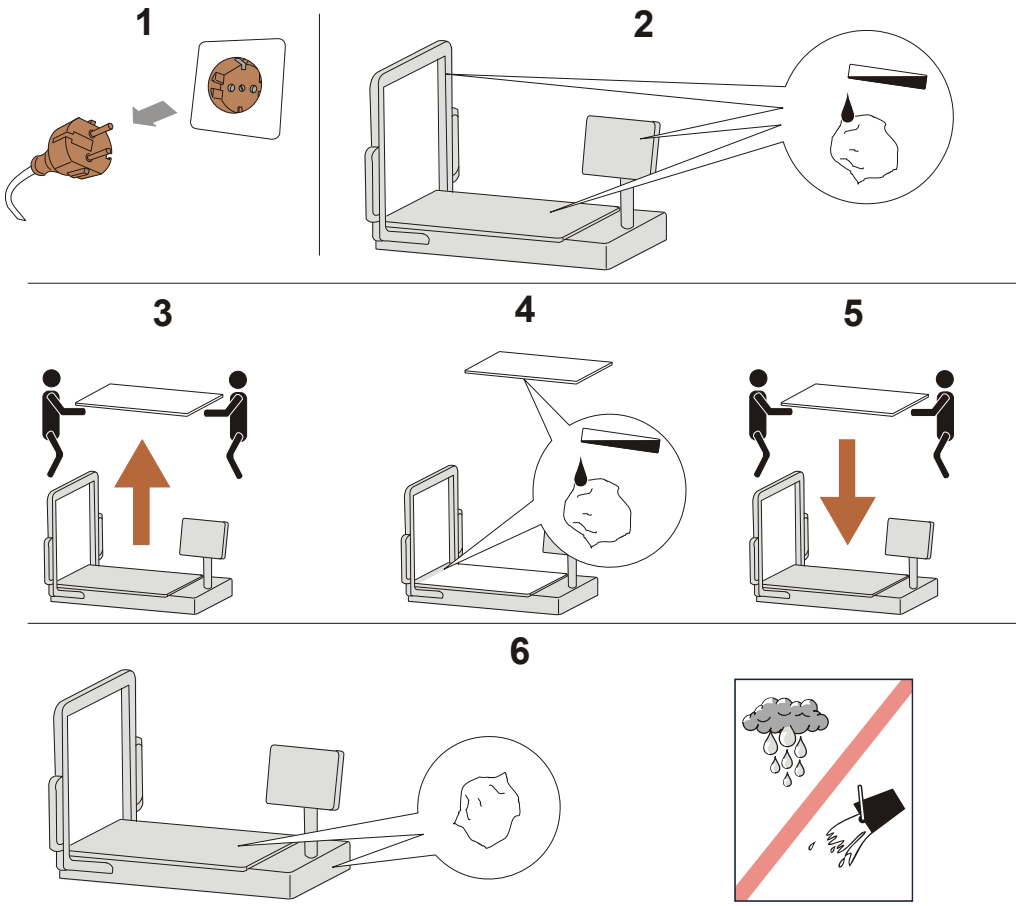

Danger
Due to the weight of the glass plate, two people must lift it. Risk of injury due to incorrect lifting technology or the glass breaking!

Step 1 Before starting cleaning, switch off the device and disconnect it from the mains.

Step 2 Remove dust and other dirt from the glass plate and the laser sensor covers using a damp cloth.

Step 3 Task two people with lifting out the glass plate.

Step 4 Clean the glass plate from the bottom too. Clean the transmitter strip.

Step 5 Task two people with inserting the glass plate back in.

Step 6 Rub all the surfaces with a dry cloth.

Attention
No moisture must enter the volume measuring system.

7.2 Maintenance, servicing

Only trained service engineers who have been authorised by Bosche are allowed to open the volume measuring system.

Danger
Before opening the volume measuring system, you must ensure that it has been safely deenergised and disconnected from the mains.

8 Technical data

8.1 Data of the volume measuring system

Feature	Value/Unit		
	zippcube S	**zippcube M**	**zippcube L**
Lenght Widht Hight Weight	825 mm 655 mm 590 mm 50 kg	1306 mm 895 mm 741 mm 90 kg	1676 mm 1105 mm 885 mm 117 kg
Power supply - Standard - Battery switch	230 V ~ 18 V Makita rechargeable battery/19 V power supply (optional)		
Resolution (height/width)	2 mm		
Resolution (length)	1 mm		
Resolution of scale			
zippcube S	1 g		
zippcube M	10 g (1 g with optional reference scale)		
zippcube L	20 g (1 g with optional reference scale)		
Load capacity of scale	20 kg	50 kg	50 kg
Swivel capability of monitor	330 °		

8.2 Data of the optional transport trolley

Feature	Value/Unit		
	zippcube S	**zippcube M**	**zippcube L**
Lenght without handrail with handrail	746 mm 812 mm	1200 mm 1266 mm	1566 mm 1632 mm
Weight	654 mm	754 mm	954 mm
Hight	841 mm	841 mm	841 mm
Weight	50 kg	60 kg	95 kg

8.3 Object dimensions

Object dimensions	zippcube S	zippcube M	zippcube L
Max. value (LxBxH) mm	450x400x350	840x640x500	1230x850x640
Min. value (LxBxH) mm	10 x 10 x 5	10 x 10 x 5	10 x 10 x 5
Object weight (Min/ Max) kg	0,05 / 50	0,05 / 50	0,05 / 50

8.4 Scope of delivery

Component	Note
Volume measuring system zippcube	
Operating Manual	
Switch battery (optional) 3 Makita rechargeable batteries with charger 19 V power supply	

9 Spare parts

You can order the spare parts that are listed below from your dealer or directly from Bosche's Customer Service Department.

9.1 Overview of spare parts

You can purchase the components below as spare parts from Bosche's Customer Service Department:

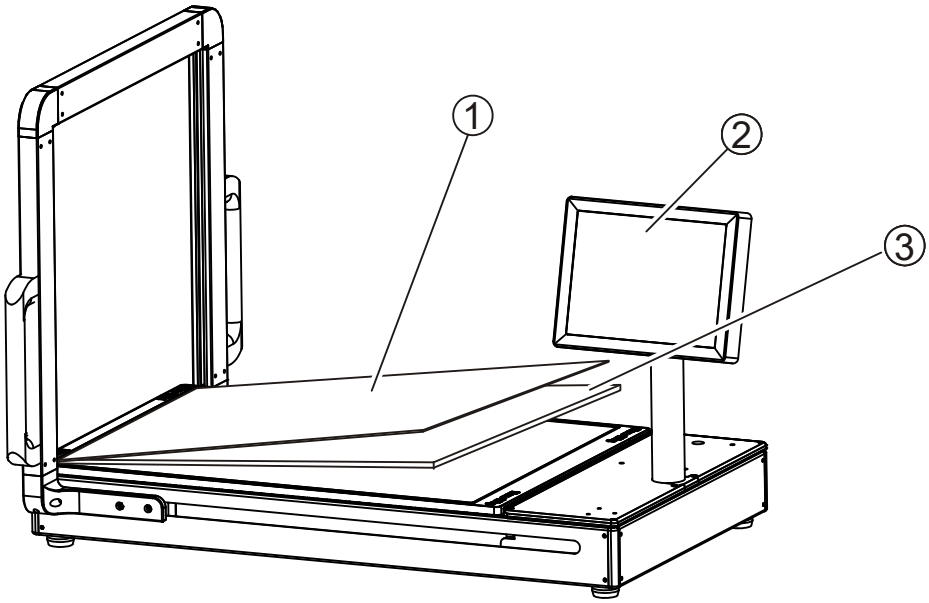

1. Perspex screen (2 mm)
2. Industrial PC
3. Toughened safety glass (8 mm)

Note
Please contact Bosche's Customer Service Department directly for any other spare parts.

10 Declaration of Conformity

Bosche GmbH & Co. KG
Reselager Rieden 3
D-49401 Damme
Telefon: 0 54 91 / 999 689 - 0
Telefax: 0 54 91 / 999 689 - 9
E-Mail: info@bosche.eu
Internet: www.bosche.eu

EU-Konformitätserklärung Declaration of conformity • Déclaration de conformité Conformiteitsverklaring • Declaración de conformidad	
Typ / Modell Type /Model • Modèle Model • Tipo / Modelo	**Zippcube®**
Seriennummern.: 2018000001 - 2030999999 For the serial numbers• Pour le numéro de séries Voor het serienummers • Para el número de serie	
Hersteller Manufacturer • Fabricant Fabrikant • Fabrikante	**Bosche GmbH & Co. KG**

Die alleinige Verantwortung für die Ausstellung trägt der Hersteller.
The sole responsibility for the issue carries the manufacturer. • La seule responsibilité de l'exposition porte le fabricant. • De verantwoordelijkheid voor de uitgifte draagt de fabrikant. • El único responsable de la publicación lleva el fabricante.

Die nicht selbsttätige Waage Zippcube®
The non-automatic weighing instrument – L'instrument de pesage á foncionnement non automatique – De niet-automatische weeg – El pesaje de funcionamiento no automático

Der oben genannte Gegenstand der Erklärung erfüllt die einschlägigen Harmonisierungs-rechtsvorschriften der Union:
The above-mentioned object of the declaration complies with the relevant harmonization legislation of the Union • L'objet de la déclaration susmentionné est conforme à la législation d'harmonisation pertinente de l'Union • Het bovengenoemde voorwerp van de verklaring voldoet aan de relevante harmonisatiewetgeving van de Unie • El objeto de la declaración mencionado anteriormente cumple con la legislación de armonización pertinente de la Unión

2014/35/EU Niederspannungsrichtlinie Low voltage Directive
2014/30/EU **EMV-Richtlinie** EMC Directive
2011/65/EU RoHS

entsprechend den folgenden Normen: In conformity with following standards: conforme aux norms suivantes: volgens de volgende normen: de acuerdo con las siguientes normas:

Immunity to interference: IEC 61000-4-3 :2006 + A1 :2007 + A2 :2010 (EN 61000-4-3 :2006 + A1 :2008 + A2 :2010) IEC 61000-4-6 :2013 (EN 61000-4-6 :2014 **Emitted interference:** IEC/CISPR 11 :2009, modified + A1 :2010 (EN 55011 :2009 + A1:2010) **Photobiological safety:** IEC 62471 :2006 (EN 62471 :2008)	EN 62368-1 :2014 EN 62311 :2008 EN 301 489-1 v2.2.0 (draft) EN 301 489-17 v3.2.0 (draft) EN 300 328 V2.1.1 EN 301 893 v1.8.1 EN 301 893 v2.1.1 (Rx blocking) EN 50581 :2012

Unterzeichnet für und im Namen von Bosche:
Signed for and on behalf of: Signé pour et au nom de:
Ondertekend voor en namens: Firmado por y en nombre de:

Damme, 27/6/2017

Dipl. Ing. Jarmila Bosche, PhD.
Geschäftsführer • Managing Director
Directeur général • Directeur • Director general

BOSCHE
WÄGETECHNIK

BOSCHE GmbH & Co. KG
Reselager Rieden 3
49401 Damme
Germany

Tel 05491 999 689 0
Fax 05491 999 689 9
www.bosche.eu
info@bosche.eu